iQ100, Induction hob, 60 cm, Black
EU61RAGA5B

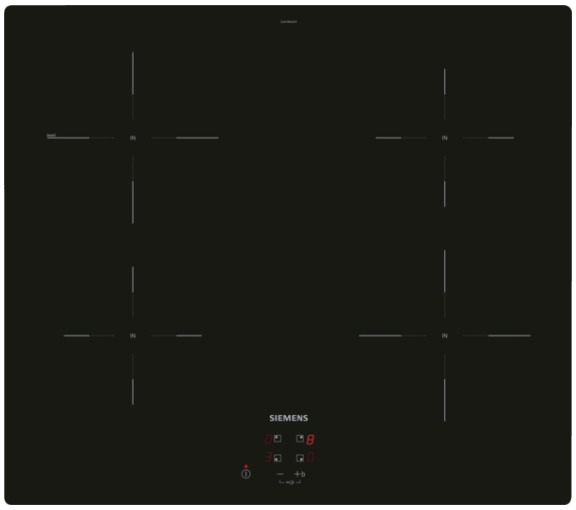

Optional accessories

HZ9SE030	Set of 2 pots and 1 pan

The induction cooktop – faster, safer, cleaner, more efficient cooking.

- ✓ touchControl makes the control of your cooktop especially convenient, just by the touch of a finger.
- ✓ powerBoost – Increases the power of an induction zone by up to 50%.
- ✓ The child safety lock safely prevents unintentional switch-on.
- ✓ Faster, cleaner and safer cooking - powerInduction.

Features

Technical Data

Product name/family : Cooking zone ceramic
Construction type : Built-in
Energy input : Electric
Total number of positions that can be used at the same time : 4
Required niche size for installation (HxWxD) : 51 x 560-560 x 490-500 mm
Width of the appliance : 592 mm
Dimensions : 51 x 592 x 522 mm
Dimensions of the packed product (HxWxD) : 126 x 753 x 608 mm
Net weight : 10.3 kg
Gross weight : 11.5 kg
Residual heat indicator : Separate
Location of control panel : Hob front
Basic surface material : Ceramic
Color of surface : Black
Approval certificates : AENOR, CE
Length of electrical supply cord : 110 cm
EAN code : 4242003899779
Electrical connection rating : 3700 W
Voltage : 220-240 V
Frequency : 50; 60 Hz

4 242003 899779

iQ100, Induction hob, 60 cm, Black
EU61RAGA5B

Features

Flexibility of cooking zones
- 60 cm: space for 4 pots or pans.
- Cooking zone front left: 145 mm, 1.4 KW
- Cooking zone rear left: 180 mm, 1.8 KW (max. power 3.1 KW)
- Cooking zone rear right: 145 mm , 1.4 KW
- Cooking zone front right: 180 mm, 1.8 KW

Usage convenience
- touchControl: control the power with imprinted +/- touch buttons.
- 9 power levels: precisely adapt the heat with 9 power levels.

Time saving & efficiency
- PowerBoost function in the front left zone
- : boil water faster thanks to 50% more energy than at the highest standard level.
- quickStart function: when switching on, the hob automatically selects the cooking zone with cookware (when placed on a zone whilst the hob is off).
- quickStop: quickly switch off a cooking zone with one longer touch.

Design
- frameless design

Safety
- Control panel lock: prevent unintended activation of the hob.
- Main on/off switch: switch off all cooking zones at the touch of a button.
- Automatic safety switch off: for safety reasons, heating stops after a preset time if not used (possible to customise).

Installation
- Dimensions of the product (HxWxD mm): 51 x 592 x 522
- Required niche size for installation (HxWxD mm) : 51 x 560 x (490 - 500)
- Min. worktop thickness: 16 mm
- Connected load: 3.7 KW
- Connection current management (20, 16, 13, 10 Amps options): limit the maximum power if needed (depends on fuse protection of electric installation).
- Power cord 1.1 m UK 3 pin plug: plug and play, no electrician required for installation.
- This hob is equipped with a UK 3 pin plug for an easy plug & play installation. The plug limits the maximum power output to 3.7 KW. For higher power output, please select a hob without plug and ensure installation is carried out by a qualified electrician.

iQ100, Induction hob, 60 cm, Black
EU61RAGA5B
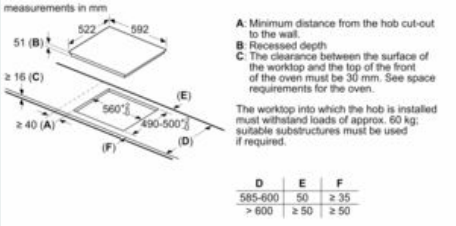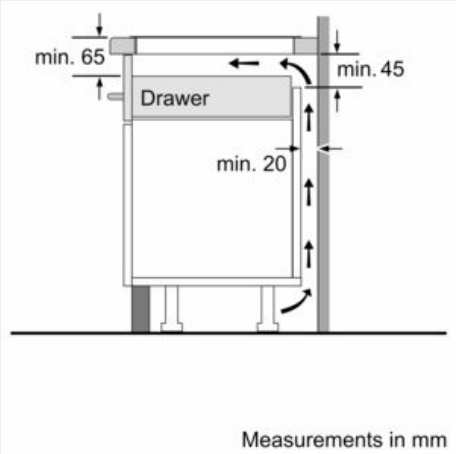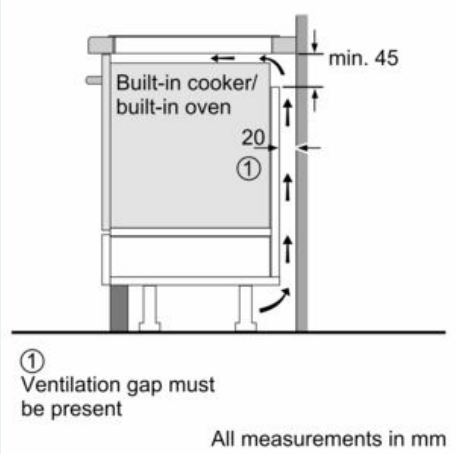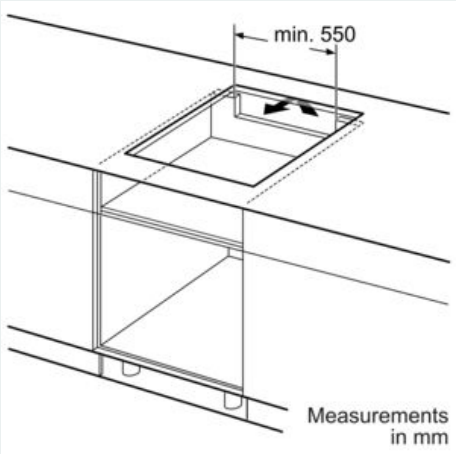
Dimensioned drawings